DECA Lab Logbook — Spring Term

Lab 1 | Task 4: EEP1 ALU Instructions

Task 4: EEP1 ALU Instructions

Objectives

- How the ALU performs operations on register data and writes new values back to the register file
- Which different operations the ALU can perform in EEP1
- How the instruction word controls which ALU operation is executed

1. Through which port does the ALU receive the information about which operation to perform (ADD, SUB, AND, etc.)? State which field(s) of the 16-bit instruction word are connected, directly or indirectly, to this port. Then, using the hardware, explain how this port connects to the ALU.DECODE block and other internal ALU blocks (such as ADDSUB). You do not need to understand the detailed internal design of these blocks yet; you only need to explain how the instruction word selects one ALU operation rather than another.

The ALU receives its operation code through input port ALUOPC (3 bits). Bits[14:12] of the 16-bit instruction word connect to ALUOPC via dpdecode.

ALUOPC feeds into ALU.DECODE, which produces internal control signals INVERT and ADDSUBCIN. These configure the ADDSUB block: INVERT = 0 selects addition, INVERT = 1 selects subtraction (by complementing INB); ADDSUBCIN provides the carry-in. All functional blocks — ADDSUB, AND1, SHIFT — compute in parallel every cycle. A main output MUX, indexed by ALUOPC, routes exactly one block's result to the ALU output. The instruction word field [14:12] therefore determines the operation entirely.

ALUOPC	Mnemonic	Output (INS(8)=0)	Output (INS(8)=1)
0	MOV	Rb	Imm
1	ADD	Ra + Rb	Ra + Imm
2	SUB	Ra − Rb	Ra − Imm
3	ADC	Ra + Rb + C	Ra + Imm + C
4	SBC	Ra − Rb − (1−C)	Ra − Imm − (1−C)
5	AND	Ra & Rb	Ra & Imm
6	CMP	Ra − Rb (flags only)	Ra − Imm (flags only)
7	SHIFT	LSL / LSR / ASR / XSR (depends on SHIFTOPC)	

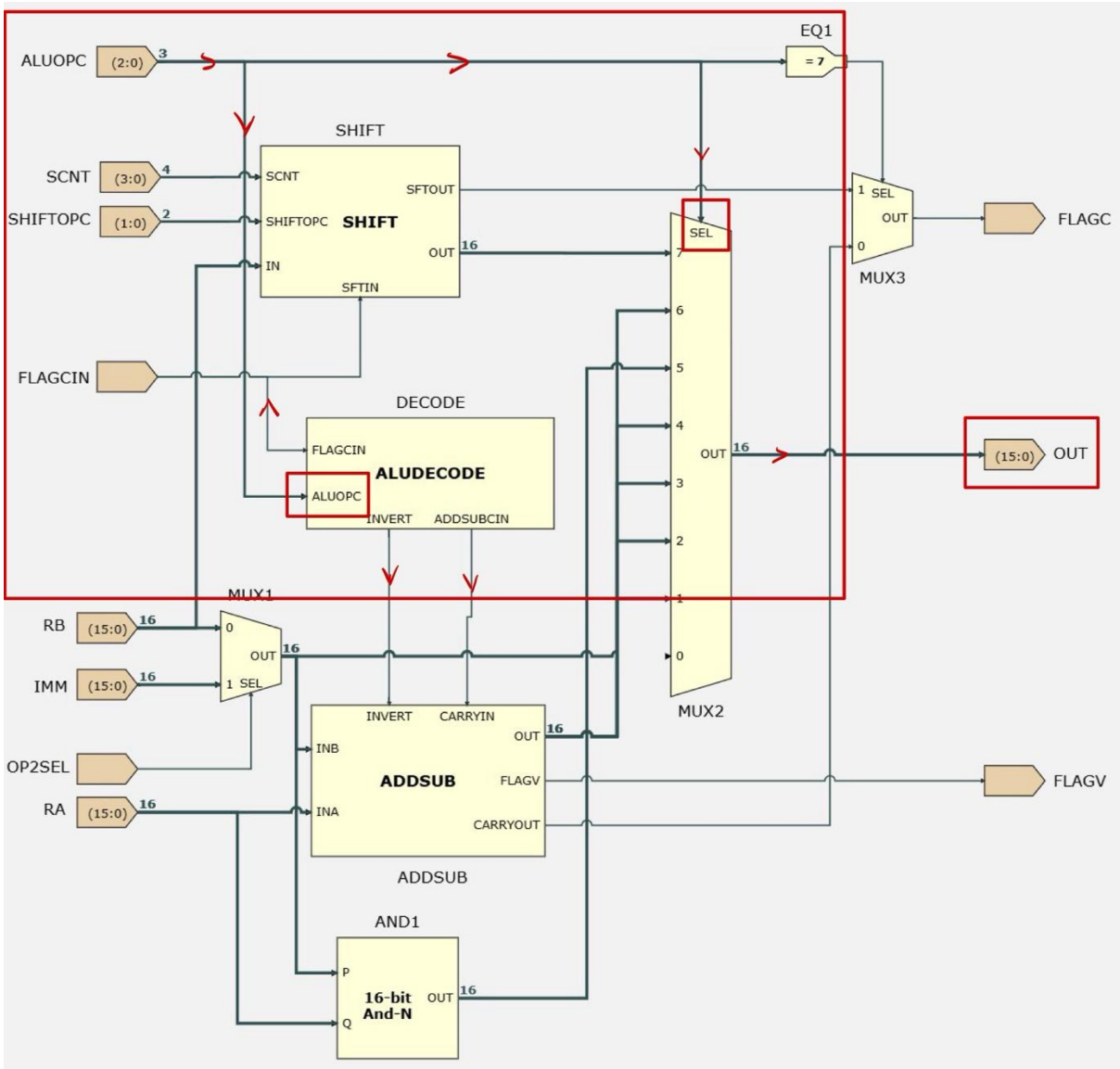
ALUOPC
(2:0)
3
EQ1
= 7
SHIFT
SCNT
(3:0)
4
SHIFTOPC
(1:0)
2
SCNT
SHIFTOPC
IN
SHIFT
SFTOUT
OUT
16
SFTIN
SEL
1
SEL
OUT
0
MUX3
FLAGC
FLAGCIN
DECODE
FLAGCIN
ALUDECODE
ALUOPC
INVERT
ADDSUBCIN
7
6
5
4
3
2
1
0
OUT
16
(15:0)
OUT
MUX1
RB
(15:0)
16
0
OUT
16
IMM
(15:0)
16
1
SEL
MUX2
INVERT
CARRYIN
OUT
16
INB
ADDSUB
FLAGV
OP2SEL
RA
(15:0)
16
INA
CARRYOUT
FLAGV
ADDSUB
AND1
P
16-bit
And-N
OUT
16
Q